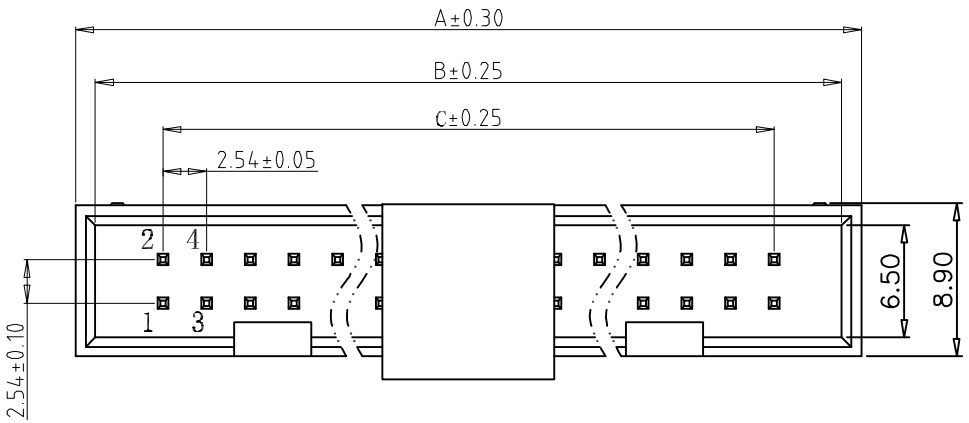


# Specifications:

| | |
|---|---|
| Current Rating | :3 Amps |
| Insulator Resistance | :1000 MΩ Min. at 100V |
| Contact Resistance | :20 mΩ Max. |
| Dielectric Withstanding | :AC 550 V |
| Retention Force | :1kgf/contact min. |
| Operating Temperature | :-55˚C ～ +105℃ |
| Soldering Temperature | :260˚C±5˚C(5S) |
| Contact Material | :Brass |
| Insulator Material | :PA9T Black,UL 94V-0 |

RoHS Compliant

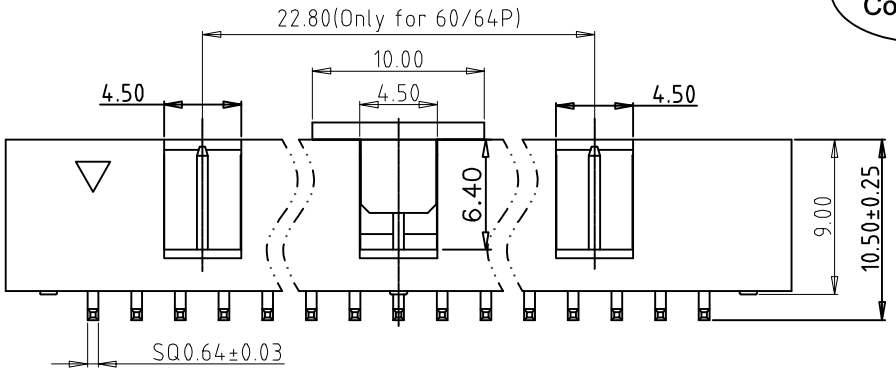


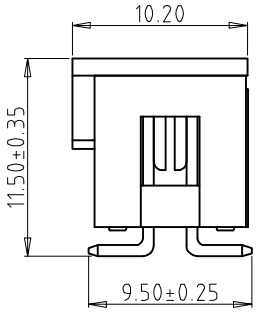


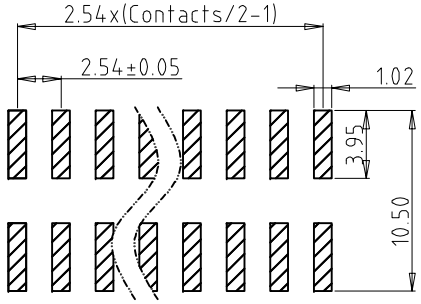


Recommended P.C.B Layout(±0.05)

| Pos. | Dem. A | Dem. B | Dem. C | Pos. | Dem. A | Dem. B | Dem. C |
|---|---|---|---|---|---|---|---|
| 6P | 15.24 | 13.04 | 5.08 | 26P | 40.64 | 38.44 | 30.48 |
| 8P | 17.78 | 15.58 | 7.62 | 30P | 45.72 | 43.52 | 35.56 |
| 10P | 20.32 | 18.12 | 10.16 | 34P | 50.8 | 48.6 | 40.64 |
| 14P | 25.4 | 23.2 | 15.24 | 40P | 58.42 | 56.22 | 48.26 |
| 16P | 27.94 | 25.74 | 17.78 | 50P | 71.12 | 68.92 | 60.96 |
| 18P | 30.48 | 28.28 | 20.32 | 60P | 83.82 | 81.62 | 73.66 |
| 20P | 33.02 | 30.82 | 22.86 | 64P | 88.9 | 86.7 | 78.74 |
| 24P | 38.1 | 35.9 | 27.94 | | | | |

# Order Information

| Series NO. | PIN NO. | PIN Type | Mounting | Plated | Cap | Post | Color | Height | Packing | |
|---|---|---|---|---|---|---|---|---|---|---|
| B22D | XX | V | S | 1 | 1 | 0 | B | 7 | X | 56 |
| 2.54P Box Header Dual Row | Pin Per Row | R: Right Angle<br>V: Vertical | D: DIP<br>S: SMT | 0: Tin<br>1: G/F | 0: w/o cap<br>1: w/ cap | 0: w/o post<br>1: w/ post | B: Black | 7: 9.0 | 1: Tube<br>2: Tape&Reel<br>3: Bag<br>4: Tray | |

| REV. | REVISION RECORD | DATE |
|---|---|---|
| A | Original | 03/30/16" |

General Tolerance
LINEAR 0.0 ±0.35 0.00 ±0.20 ANGLE ±3°
UNIT:mm

| A4 | NAME | DATE |
|---|---|---|
| APPROVED | SUNNY | |
| CHECKED | TED | |
| DESIGNER | WING | |

ARIBA TECHNOLOGY CO., LTD.

TITLE: 2.54P Box Header SMT Vertical Dual Rows 9.0H

DWG.NO: B22DXXVS110B7X-56 REV. A

SCALE 1 : 1 SHEET 1 OF 1